Component Recognition Tool to Display Technical Information in the Users Field of View

CONTEXTUAL VIEW
MR INFORMATION

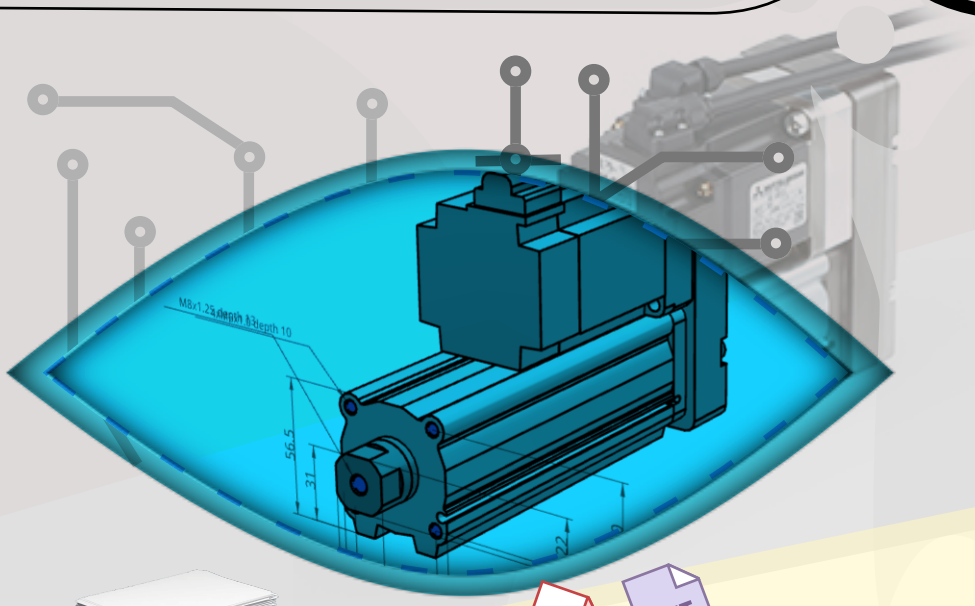

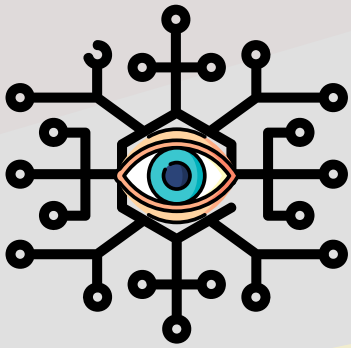

CONTEXTUAL VIEW

MIXED REALITY
Technical
INFORMATION

AR + AI +WebRTC

Classical technical documentation

CHALLENGE

Despite the advances and opportunities digitization provides, countless technical documentation is still available in printed form or PDF files. However, users might not have the time to navigate multiple pages of technical documentation. Consequently, classical technical documentation with lengthy texts will become progressively obsolete with the progressing digitization. Additionally, vast amounts of data are increasingly accumulated digitally through sensors, software, and devices. Nonetheless, classical technical documentation in print or PDF cannot profit from such data. Thus, there is an urgent need for digitalization in technical documentation, shifting to technical information - meaning to convert processes and using digital technologies - to create user-friendly and context-sensitive technical information. i.e., intelligent information.

SOLUTION

The use of augmented reality - one of these emerging digital technologies - will enable users to obtain immediate technical information combined with their real context situation along with the overall lifecycle of a component or device. The application to be developed recognizes e.g., a device in its real-time environment and augments it with digital technical information to assist the user in completing a task. Long text descriptions and explanations will be replaced with animated 3D augmented reality holograms. Besides, an artificial intelligence chatbot will be integrated to assist the user for additional questions. For the developed application to reliably recognize an item from every angle and without any marker, all components and tools must be scanned and fed into a computer vision model.

OUTCOME

The developed application can be used with mobile phones, tablets, and augmented reality glasses. Users obtain displayed information combined of real device and environment plus virtual AR information enabling them to focus on their tasks without switching their gaze; and using AR-glasses, a hands-free technical information for the operation of the device. Furthermore, stored status information of the device being visually fixated can be displayed with augmented elements e.g., tank level, temperature, etc. In case of informational ambiguity, the AI chatbot integrated in the application will clarify the information with users to ensure the correct technical information is displayed. Shall users need additional information, linking to an online technical documentation via the manufacturers' website is available. Shall the AI chatbot not be able to respond to questions or clarify ambiguity, tech support can be contacted directly.

zh aw
databooster